Skydio

Skydio Dock for X10
Site Readiness Manual

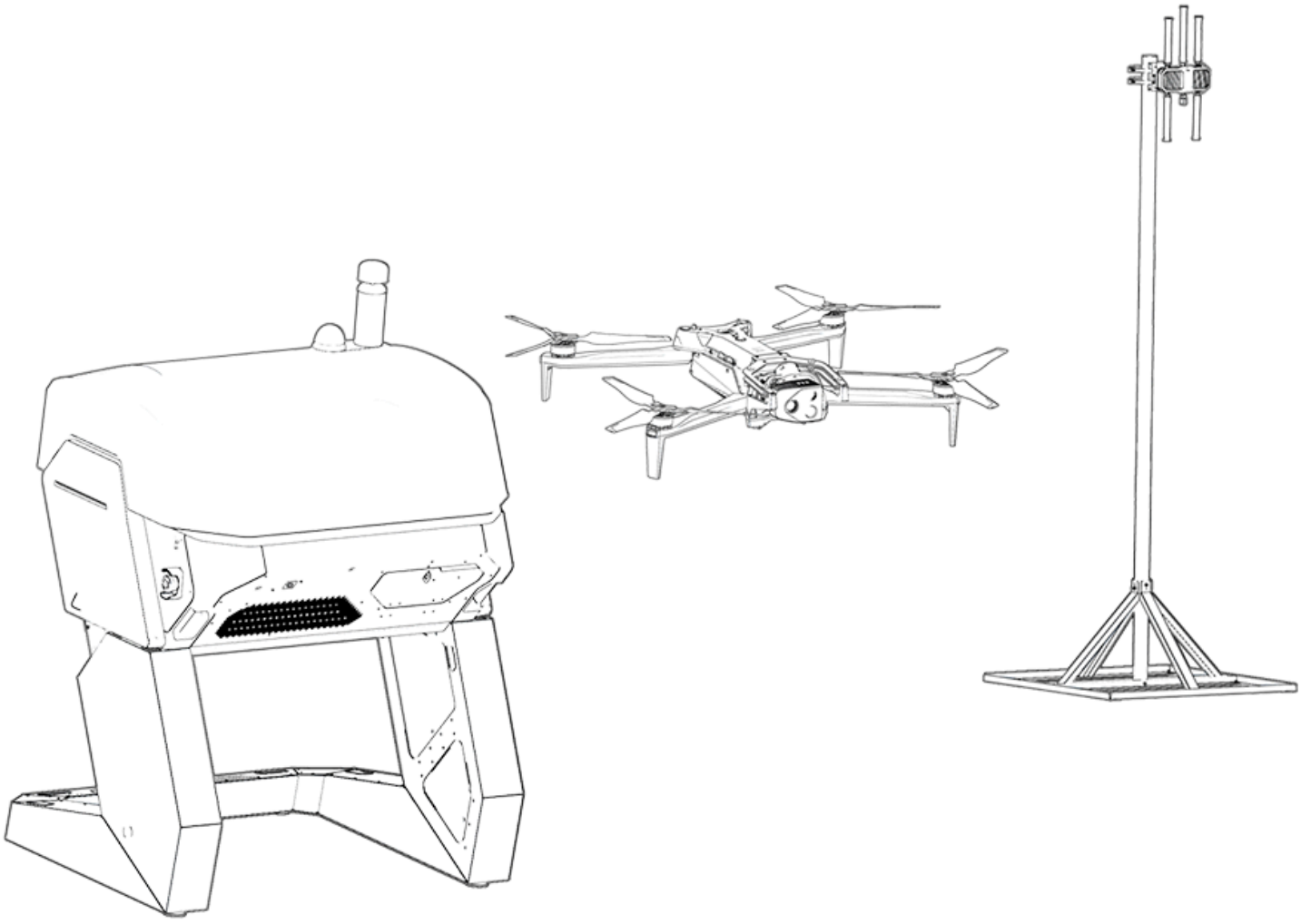

Dock for X10 Site Readiness Manual 3
- Revision History 4
- Dock Specifications 5
  - Technical Specifications 5
  - Weights and Dimensions 7
- External Radio Specifications 10
  - Technical Specifications 10
  - Weights and Dimensions 12
- Site Preparation 13
  - Dock Power Requirements 13
  - External Radio Power Requirements 15
  - Wiring Configuration 16
  - Ethernet Cable Requirements 19
  - Computer System Requirements 20
- Installation Requirements 22
  - Transport and Delivery 22
  - Dock Installation Requirements 24
  - External Radio Installation Requirements 30
  - Multiple Docks (Hive) 34
- Appendixes 35
  - Corrosion Guidance 35
  - Safety Information 35

Dock for X10 Site Readiness Manual

This document explains installation requirements, technical specifications, network and power provisioning, and flight-zone design for one or more Skydio Dock for X10s.

NOTICE

Follow official documentation and updates.
Failure to follow any instructions or recommendations in Skydio documentation may void the Skydio Limited Warranty or other terms and conditions.
Please read all documentation provided with the Skydio Dock for X10, including but not limited to the Doc for X10 Safety Guidelines in the Safety and Operating Guide: www.skydio.com/safety.

© 2026 Skydio, Inc. All rights reserved. Proprietary. Printed copies are uncontrolled.

Revision History

Revision	Description	Date
1	Initial Release	May 7, 2026
2	Updated layout. Removed Operating Environment sections.	May 8, 2026
2.1	Updated layout and added External Radio content.	July 27, 2026
3	Updated Computer Systems Requirements. Added maximum Dock platform installation specification.	August 20, 2026
3.1	Updated External Radio wind specs. Mounting Options *(on page 32)*	September 4, 2026

© 2026 Skydio, Inc. All rights reserved. Proprietary. Printed copies are uncontrolled.

Dock for X10 Specifications

Technical Specifications

This section contains technical specifications for the Dock for X10.

Category	Specification / Requirement
Launch Time	20 Seconds
Battery Charge Time	15% to 95% within 35 minutes at 77°F (25°C) Cooling or heating will increase overall charge time to max of 73 minutes
Power Input	100 V to 240 V (200 V to 240 V required below 32°F (0°C)). 50 to 60 Hz
Power Load	2200W at peak load 20A breaker for 200 V to 240 V For more information, see Peak Power by Dock State *(on page 15)*
	1200W for operations above 32°F (0°C) 15A breaker for 100 V-120 V
Input/Output	2x PoE (30 W, 48 V) 1x USB 3.0 (5 W, 5 V)
Onboard Storage	512 GB (Non-removable, for media sync purposes only)
Service Life	5 years with regular service conducted annually

WARNING:

Ice accumulation when operating below 32°F (0°C) without a 200V-240V power supply. When operating below 32°F (0°C) without a 200V-240V power supply, Dock Heater functionality will be unavailable. Ice accumulation can result in degraded performance, crashes, or loss of the aircraft. For operation below 32°F (0°C), a 200V-240V power supply from a dedicated 20A breaker must be provided to enable Dock Heater functionality. Provide a 100V-120V power supply from a dedicated 15A breaker for operation in temperatures from 32°F (0°C) to 122°F (50°C).

© 2026 Skydio, Inc. All rights reserved. Proprietary. Printed copies are uncontrolled.

Operating Limits

Category	Specification / Requirement
Launch / Land Winds	Up to 12 m/s (28 mph / 45 km/h)
Standby Wind Rating	Bolted to Permanent Structure: Up to ~160 mph (~257 km/h) **Note:** For bolting guidance information, see Dock Installation Requirements *(on page 24)* Skydio Dock Boots Installed: ~80 mph (~128 km/h) Non-Bolted: ~40 mph (~64.4 km/h)
Operational Temperature	-4° to 122° F (-20° to 50° C)
Standby/Storage Temperature	-40° to 140° F (-40° to 60° C)
Ingress Protection (Roof Open)	IPX5
Ingress Protection (Roof Closed)	IPX6
Corrosion Resistance	Designed to operate in humid environments, outside of direct saltwater splash zones.
Rain and Snow Limitations	Operational Capability*: • 0.25 in/hr (light-moderate) • Standby: 4.0 in/hr (Heavy) *Limited by Dock for X10.

© 2026 Skydio, Inc. All rights reserved. Proprietary. Printed copies are uncontrolled.

Weights and Dimensions

Weights

Category	Specification / Requirement
Dock Roof	36 lb (16.3 kg)
Dock Base	143 lb (64.9 kg)
Dock Stand	53 lb (24.0 kg)
Fully Assembled	240 lb (108.9 kg)
Total Shipping Weight	300 lb (136.1 kg)

WARNING:

Transportation pallet tip hazard. Do not remove the Dock from its shipping pallet until it has reached the designated final installation location. While operating lift equipment, wear appropriate PPE.

Dimensions

Category	Specification / Requirement
Height (Front View - Closed Roof)	55.5 in (141.0 cm)
Height (Front View - Open Roof Maximum)	37.6 in (95.5 cm)
Height (Side View - Dock Base)	31.3 in (79.5 cm)
Height (Side View - Dock Stand)	24.1 in (61.2 cm)
Width (Front View - Closed Roof)	37.7 in (95.8 cm)
Width (Front View - Open Roof)	40.5 in (102.9 cm)
Depth (Side View – Closed Roof)	34.1 in (86.6 cm)
Depth (Side View – Open Roof)	45.9 in (116.6 cm)
Depth (Side View - Maximum)	48.9 in (124.2 cm)
Doorway (Minimum)	29.7 in (75.4 cm)

© 2026 Skydio, Inc. All rights reserved. Proprietary. Printed copies are uncontrolled.

Height / Width

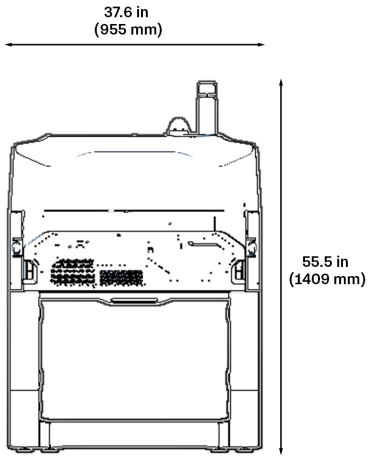

Depth / Base Height / Stand Height

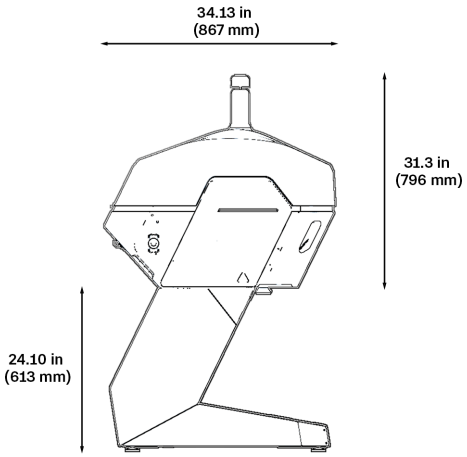

Entryway Minimum

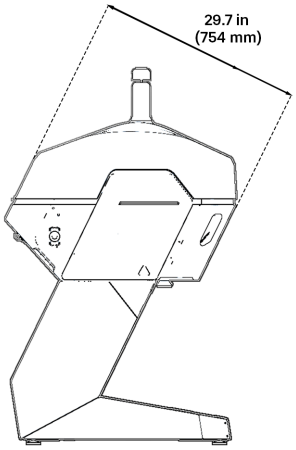

Width - Roof Open

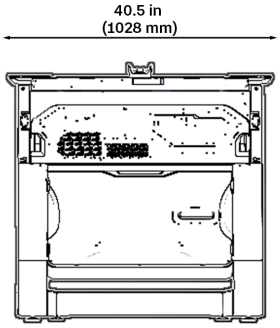

Depth - Roof Open Maximum

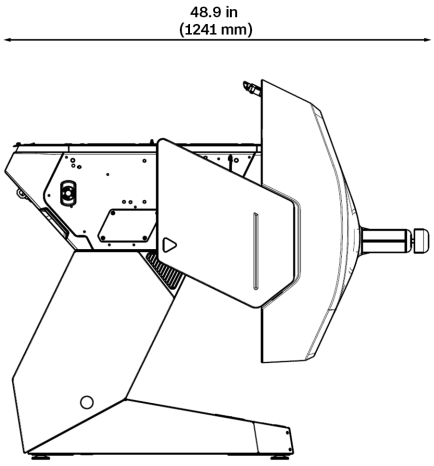

Depth / Height - Roof Open

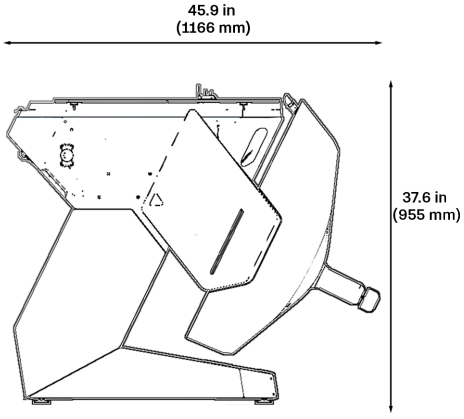

© 2026 Skydio, Inc. All rights reserved. Proprietary. Printed copies are uncontrolled.

Materials

The Dock for X10 is composed of the following materials:

- Exterior Plastic: UL F1 rated* coating meets AAMA 2604 compliance for UV Resistance.
- Exterior Metals: Coated with Tiger Drylac Series 138* coating.

> **Note:**
> This coating is AAMA 2604 compliant for UV Resistance

*All materials and components are subject to change

© 2026 Skydio, Inc. All rights reserved. Proprietary. Printed copies are uncontrolled.

External Radio Specifications

Technical Specifications

WNC Radio Antenna

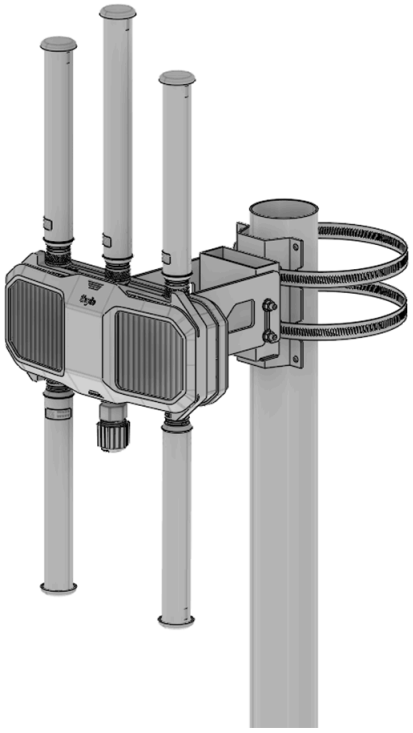

Type	Specification / Requirement
Low Voltage Power	Nominal: 11 to 13 W USB-C: 5 V / 3 A, 9 V / 3 A, 12 V / 3 A, 15 V / 3 A, 20 V / 3 A PoE: IEEE 802.3af
Power Input	PoE from Skydio Dock or by Customer network. Minimum: IEEE 802.3af
Power Load	11 to 13 W Power draw will increase with increasing cable lengths
Input/Output	1x Ethernet, 1x USB-C 3.0
Operating Frequency	Connect SL: 2400 to 2483.5 MHz and 5150 to 5850 MHz

© 2026 Skydio, Inc. All rights reserved. Proprietary. Printed copies are uncontrolled.

Type	Specification / Requirement
ADS-B In	Included
GNSS	GPS + Galileo + GLONASS + BeiDou

Operating Limits

Type	Specification / Requirement
Wind Resistance*	Up to 130 mph (209 km/h)
Operational Ranges	Urban: 0.6-1.2 miles (1-2 km) Suburban: 1.2-3.7 miles (2-6 km) Rural: 3.7-7.5 miles (6-12 km) Max: 3.7-7.5 miles (6-12 km)
Operational Temperature	-4° to 122°F (-20° to 50°C)
Storage Temperature	-40° to 176°F (-40° to 80°C)
Ingress Protection	IP55
Corrosion Resistance	Designed to operate in humid environments, outside of direct saltwater splash zone
Service Life	Continual Service with Dock: 5 Years Vehicle-Mounted: 3 Years Human-Carried: 2 Years

* Measures the wind speed at which the External Radio and bracket will remain on the pole they are mounted to. This specification does not indicate the wind resistance of the pole itself.

© 2026 Skydio, Inc. All rights reserved. Proprietary. Printed copies are uncontrolled.

Weights and Dimensions

Weights

Category	Specification / Requirement
Total Weight	2.65 lbs (1.2 kg)

Dimensions

Category	Specification / Requirement
Height (Antenna to Antenna)	21.65 in (550.0 mm)
Width (Pine Dual Band)	9.4 in (240 mm)
Depth (Pine Dual Band to Rear Bracket)	9.25 in (235 mm)

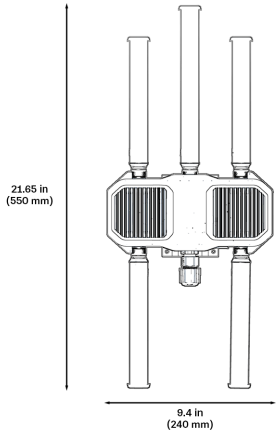

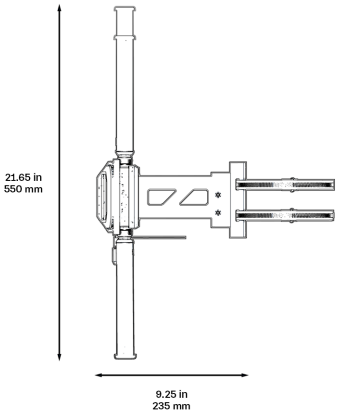

© 2026 Skydio, Inc. All rights reserved. Proprietary. Printed copies are uncontrolled.

Site Preparation

Dock Power Requirements

Power Connection Options

The Dock for X10 may be powered with either a 100V-120V connection or a 200V-240V connection. To ensure the Dock is able to operate in below freezing conditions, use a 200V-240V connection.

WARNING:

Ice accumulation when operating below 32°F (0°C) without a 200V-240V power supply. When operating below 32°F (0°C) without a 200V-240V power supply, Dock Heater functionality will be unavailable. Ice accumulation can result in degraded performance, crashes, or loss of the aircraft. For operation below 32°F (0°C), a 200V-240V power supply from a dedicated 20A breaker must be provided to enable Dock Heater functionality. Provide a 100V-120V power supply from a dedicated 15A breaker for operation in temperatures from 32°F (0°C) to 122°F (50°C).

Disconnect Accessibility:

Provide a local switched disconnect on the roof, accessible to both Skydio and Customer personnel.

DANGER:

Electrical hazard. Exposure to energized components can result in serious injury or death. Follow local/site specific lockout/tagout procedures for de-energizing the Dock and removing electrical hazards. Ensure the work area is clear of unnecessary personnel. If necessary, restrict access to the area.

Before performing service on the unit, do the following:

- Engage the Dock E-Stop button.
- Turn the Dock OFF.
- Disconnect the Dock from the AC power supply.
- Disconnect all external data and power cables from the Dock.
- Complete required lockout/tagout procedures per site requirements.

Surge Protection:

To better protect the dock, it is recommended to use surge protection rated **40 kA** or **4 kV**.

© 2026 Skydio, Inc. All rights reserved. Proprietary. Printed copies are uncontrolled.

Power for Each Dock

Type	Specification / Requirement
Power Input	100 V to 240 V (200 V to 240 V required below 32°F (0°C)). 50 to 60 Hz
Power Load	2200W at peak load 20A breaker for 200 V to 240 V
	1200W for operations above 32°F (0°C) 15A breaker for 100 V-120 V
Input/Output	2x PoE (30 W, 48 V) 1x USB 3.0 (5 W, 5 V)

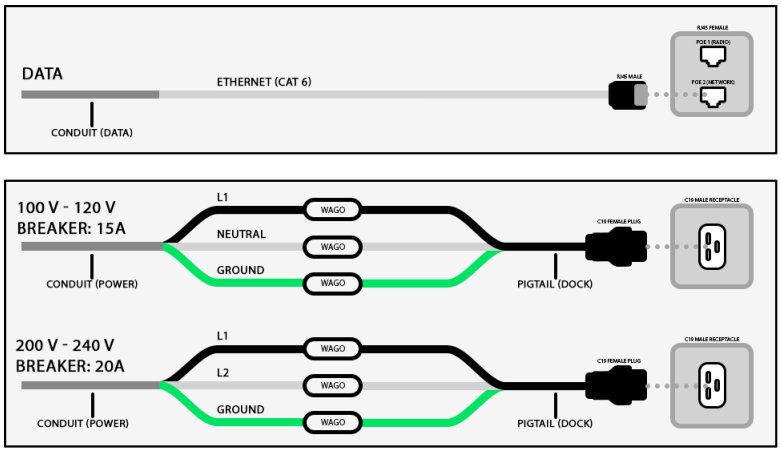

© 2026 Skydio, Inc. All rights reserved. Proprietary. Printed copies are uncontrolled.

Peak Power by Dock State

Device / Status	Hot	Room Temperature	Cold Peak Voltage (VAC): 100 V	Cold Peak Voltage (VAC): 240 V
	140 °F / 60 °C	75 °F / 23.8 °C	-4° F / -20 °C	-4° F /-20 °C
Dock - Not Charging	550 W	400 W	1300 W	1300 W
Dock - Charging	850 W	700 W	1430 W	1600 W
Dock - Super Charging	1000 W	850 W	1430 W	1750 W
Dock - Moving	1200 W	1000 W	1120 W	1300 W

External Radio Power Requirements

Type	Specification / Requirement
Power	Nominal: 11 to 13 W USB-C: 5 V / 3 A, 9 V / 3 A, 12 V / 3 A, 15 V / 3 A, 20 V / 3 A PoE: IEEE 802.3af
Power Input	PoE from Skydio Dock or by Customer network. Minimum: IEEE 802.3af
Power Load	11 to 13 W Power draw will increase with increasing cable lengths

© 2026 Skydio, Inc. All rights reserved. Proprietary. Printed copies are uncontrolled.

Wiring Configuration

Hardwired and Conduit Requirements

DANGER:

Electrical hazard. Exposure to energized components can result in serious injury or death. Follow local/site specific lockout/tagout procedures for de-energizing the Dock and removing electrical hazards. Ensure the work area is clear of unnecessary personnel. If necessary, restrict access to the area.

Before performing service on the unit, do the following:

- Engage the Dock E-Stop button.
- Turn the Dock OFF.
- Disconnect the Dock from the AC power supply.
- Disconnect all external data and power cables from the Dock.
- Complete required lockout/tagout procedures per site requirements.

WARNING:

Ice accumulation when operating below 32°F (0°C) without a 200V-240V power supply. When operating below 32°F (0°C) without a 200V-240V power supply, Dock Heater functionality will be unavailable. Ice accumulation can result in degraded performance, crashes, or loss of the aircraft. For operation below 32°F (0°C), a 200V-240V power supply from a dedicated 20A breaker must be provided to enable Dock Heater functionality. Provide a 100V-120V power supply from a dedicated 15A breaker for operation in temperatures from 32°F (0°C) to 122°F (50°C).

The following applies from the perspective of the Drone:

- Low voltage data is routed to the left side of the Dock.
- High Voltage AC power is routed to the right side of the Dock.

© 2026 Skydio, Inc. All rights reserved. Proprietary. Printed copies are uncontrolled.

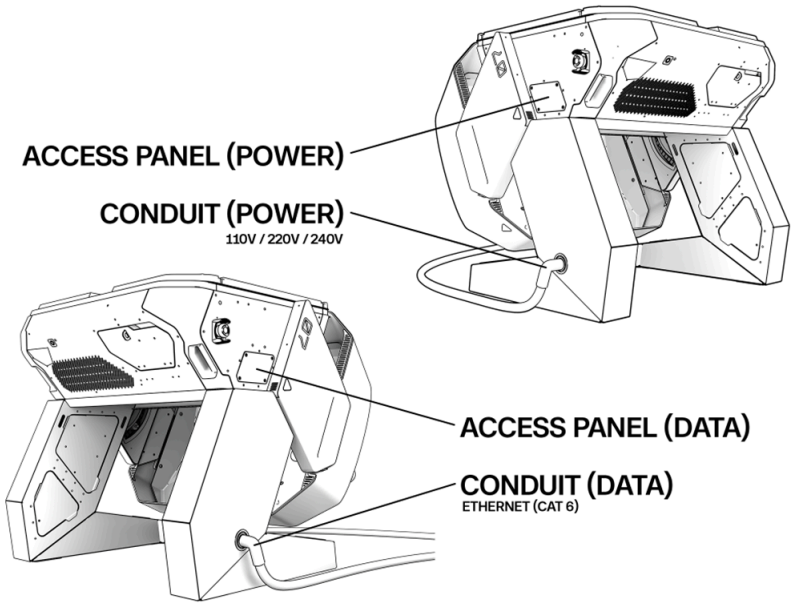

© 2026 Skydio, Inc. All rights reserved. Proprietary. Printed copies are uncontrolled.

The following hardwire and conduit requirements apply to Dock installation:

- There must be 1x circuit per Dock.
- A manual disconnect must be accessible to a Skydio Authorized Technician and placed within line of sight of the Skydio Dock.
- For **200 V to 240 V**: **12 AWG** setup required for cold weather (**L1, L2, G**)
- For **100 V to 120 V**: **12 AWG** setup (**L, N, G**)
- Hard conduit is run between the circuit breaker box to the flex conduit beside the Dock.
- The Knockout on both sides of the Dock is sized for **1.0" EMT** conduit or equivalent to a **2.54 cm** diameter hole.

> **Note:**
> Located **6.5" (16.5 cm)** above ground level.

- To ensure there is enough conduit wiring to the terminal connections inside the Dock, provide an additional **4.0 ft (1.2 m)** wire beyond each Dock's knockout location.
- Hardwired power connects to Wago connectors located inside of the Dock.

Conduit

Wago Connectors

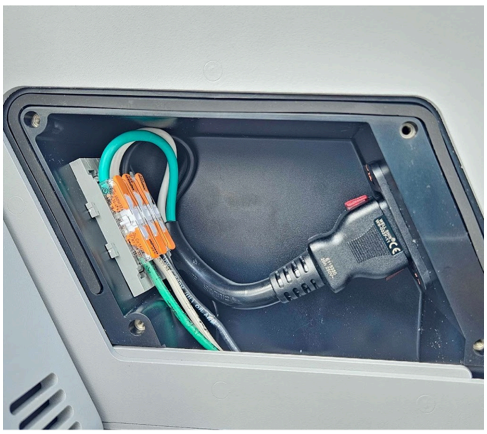

© 2026 Skydio, Inc. All rights reserved. Proprietary. Printed copies are uncontrolled.

Ethernet Cable Requirements

Skydio Device	**X10 Dock Cable**	**External Radio**
Connection	**X10 Dock to PoE Switch**	**External Radio to X10 Dock or PoE Switch**
Conductors	23 AWG Solid Bare Copper	23 AWG Solid Bare Copper
Shielding	Aluminum Foil Overall (F/UTP)	Aluminum Foil Overall (F/UTP)
Outer Diameter (OD)	No Restriction	5.3mm - 6.5mm (Restricted to ensure gland fits)
Jacket	CMX rated Outdoor rated, UV-resistance in compliance with UL444, Withstands temps -40 to 90C (not necessarily direct-burial rated)	CMX rated Outdoor rated, UV-resistance in compliance with UL444, Withstands temps -40 to 90C (not necessarily direct-burial rated)
Bandwidth	Up to 550 MHz	Up to 550 MHz
PoE Support	Up to 100W (IEEE 802.3af/at/bt, 4PPoE)	Up to 100W (IEEE 802.3af/at/bt, 4PPoE)
Certification	ANSI/TIA-568.2-D, cETLus, RoHS-3, Fluke tested	ANSI/TIA-568.2-D, cETLus, RoHS-3, Fluke tested
Connectors	CAT6 Shielded 23AWG RJ45 Connector	CAT6 Shielded 23AWG RJ45 Connector
Strain Relief	Strain relief is mandatory on dock side to prevent long term damage. [Note there is a significant ~30 deg bend when plugged into the dock making the strain relief critical]	No Strain relief on waterproof gland on the External Radio-side. Strain Relief required if the other side is plugged into the dock. Else optional.

To prevent signal loss for network installations, **CAT6A** cabling offers higher performance specifications compared to standard **CAT6**. Ensure cable length is less than **328 ft (100.0 m)**.

CAT6 cable with solid copper and double shielding is more than sufficient for nearly all installations. **CAT6A** is not required for Skydio systems as our operations do not utilize the higher throughput speeds it supports.

CAUTION:

Improper installation, routing, or excessive length of Cat6 network cables. Improper cabling may result in degraded data transfer rates and reduced communication reliability. Do not exceed recommended cable length limit. Avoid kinking, sharp bends, or placing excess weight on Cat6 network cables.

When to Consider CAT6A

For installations with long cable runs or environments with significant electrical interference, **CAT6A** may provide additional protection against signal loss or errors. These are edge scenarios, however, and in the vast majority of deployments, **CAT6** will perform reliably without issue.

© 2026 Skydio, Inc. All rights reserved. Proprietary. Printed copies are uncontrolled.

Computer System Requirements

Remote Flight Deck/DFR Command System Requirements

For optimal performance with **Remote Flight Deck**, and **DFR Command**, ensure the computers used with the Dock for X10 Flight System meet the requirements below.

> **Note:**
> Skydio does not support accessing Remote Flight Deck from Virtual Desktop Infrastructure (VDI). Remote Flight Deck must be flown on a local machine.

System Performance Requirements

Category	Minimum	Recommended
CPU	Intel Core i5-8400 or AMD Ryzen 5	Intel Core i7-12700 or AMD Ryzen 7
RAM	32 GB DDR4	32 GB DDR4 or greater
GPU	**Desktop**: NVIDIA GeForce RTX 4060 (8 GB VRAM) **Laptop**: NVIDIA GeForce RTX 4070 Laptop GPU (8 GB VRAM)	**Desktop**: NVIDIA GeForce RTX 4070 (12 GB VRAM) **Laptop**: NVIDIA GeForce RTX 4080 Laptop GPU (12 GB VRAM)
Network	100 Mbps sustained with latency under 50 ms	1 Gbps Ethernet preferred, or Wi-Fi 6E with minimum 300 Mbps sustained with latency under 30 ms

Display

Category	Minimum	Recommended
Resolution	1920 × 1080 (Full HD)	2560 × 1440 on a 30-inch Ultrawide Display
Screen width	1200 pixels	1600 pixels
Screen height	1024 pixels	Not Specified

Operating System and Browser Support

> **Note:**
> Keep supported browsers up to date.

A 64-bit Operating System is required.

Supported	Not Supported
Windows 10 or later, macOS 10.12 or later	Linux
Google Chrome, Microsoft Edge	Apple Safari, Mozilla Firefox, Microsoft Edge (not based on Chromium), Microsoft Internet Explorer

© 2026 Skydio, Inc. All rights reserved. Proprietary. Printed copies are uncontrolled.

DFR Command Operator Suggested Equipment List

For a DFR Command Operator, Skydio suggests the following equipment:

- A PC meeting all system requirements
- Monitor
- Monitor Stand
- Lighting
- Temp Keyboard
- Chairs
- Desk

Optional Accessories

- Desk Phone
- Walkie Talkie

© 2026 Skydio, Inc. All rights reserved. Proprietary. Printed copies are uncontrolled.

Installation Requirements

DANGER:

Improper installation or configuration of the Dock for X10. Improper installation or configuration of the Dock for X10 will result in equipment damage, serious injury, or death. For every Dock for X10 installation location, including connectivity and Radio Frequency (RF) mapping, final placement and installation requirements must be determined through a Skydio Site Survey.

Transport and Delivery

Customer Transportation Responsibilities

The Customer is responsible for transporting the Skydio Dock from the shipment destination to the final installation site. Transport may require lifting or craning the pallet to a rooftop or elevated location, depending on site conditions.

WARNING:

Transportation pallet tip hazard. Do not remove the Dock from its shipping pallet until it has reached the designated final installation location. While operating lift equipment, wear appropriate PPE.

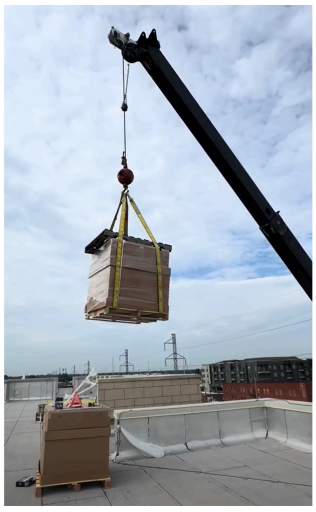

To transport, do the following:

- Lift or hoist the Dock in the packaging by crane or telescopic handler.
- If a crane or forklift are not available, separate the Dock into 3x major assemblies for other logistical solutions.

Shipping Information

Type	Specification / Requirement
Shipping Dimensions	40 in x 48 in x 58 in (101.6 cm x 121.9 cm x 147.3 cm) Pallet

© 2026 Skydio, Inc. All rights reserved. Proprietary. Printed copies are uncontrolled.

Type	Specification / Requirement
Total Shipping Weight	~300 to 360 lbs (136.1 to 163.3 kg)

Skydio Installation and Validation

Skydio Authorized Technicians and Field Services teams will perform system assembly and installation, validation testing, radio frequency (RF) analysis, connectivity mapping, and system activation.

© 2026 Skydio, Inc. All rights reserved. Proprietary. Printed copies are uncontrolled.

Dock Installation Requirements

DANGER:

Improper installation or configuration of the Dock for X10. Improper installation or configuration of the Dock for X10 will result in equipment damage, serious injury, or death. For every Dock for X10 installation location, including connectivity and Radio Frequency (RF) mapping, final placement and installation requirements must be determined through a Skydio Site Survey.

Layout and Clearance

This section describes site layout and clearance requirements for the Skydio Dock for X10. Proper clearance helps ensure unobstructed Drone flight paths, GNSS reception, and safe approach and landing operations.

Obstacle Clearance

The Dock requires an open field of view to the sky within a 15 ft (4.6 m) radius of the dock center point. Inside this zone, any obstacle taller than the dock (ex. fence, wall, building, light pole, or overhanging tree) must be positioned so that its horizontal distance from the dock is at least `1.2 x the obstacle's height (H)`. Obstacles beyond the 15 ft radius are not restricted. GPS-transparent objects (ex. thin bridges, poles, or towers that do not block the sky view) are exempt.

To support Drone operation and unobstructed approach paths, maintain the following clearances:

- Ensure no tall obstacles are present within a **15 ft (4.6 m)** radius surrounding each Dock set.
- Maintain a clear line of sight above and around each Dock.

Obstacle Height	1.2 x H	Field Minimum Distance
3.0 ft (0.9 m)	3.6 ft (1.1 m)	4.0 ft (1.2 m)
4.0 ft (1.2 m)	4.8 ft (1.5 m)	5.0 ft (1.5 m)
5.0 ft (1.5 m)	6.0 ft (1.8 m)	6.0 ft (1.8 m)
6.0 ft (1.8 m)	7.2 ft (2.2 m)	8.0 ft (2.4 m)
7.0 ft (2.1 m)	8.4 ft (2.6 m)	9.0 ft (2.7 m)
8.0 ft (2.4 m)	9.6 ft (2.9 m)	10.0 ft (3.0 m)
9.0 ft (2.7 m)	10.8 ft (3.3 m)	11.0 ft (3.4 m)
10.0 ft (3.0 m)	12.0 ft (3.7 m)	12.0 ft (3.7 m)
11.0 ft (3.4 m)	13.2 ft (4.0 m)	14.0 ft (4.3 m)
12.0 ft (3.7 m)	14.4 ft (4.4 m)	15.0 ft (4.6 m)

For Dock Hive information, see: Multiple Docks (Hive) *(on page 34)*

© 2026 Skydio, Inc. All rights reserved. Proprietary. Printed copies are uncontrolled.

GNSS Considerations

For the Global Navigation Satellite System (GNSS), note the following:

- Transparent objects are permissible (ex., poles, trees, nets, or items which usually do not fully block GNSS signals). To avoid these violations, users should ensure to set a return height.
- For non-transparent objects, Skydio uses a GPS Survey Tool and may need to consult with internal engineers to determine if the item is permissible to mitigate risk of reduced landing reliability.

Approach and Landing

When a Drone is approaching or landing at a Dock, the following conditions apply:

- To detect a Dock during descent, the Drone must descend within **12 ft (3.7 m)** above the Dock.

  Note:
  Obstacle Avoidance (OA) may be deactivated.

- Drone GPS may be inaccurate by a few meters.
- A clear line of sight to the Dock must be maintained.

Note:
This clearance accounts for potential wind, gusts, estimation errors, or control deviations.

Roof Rotation and Space Considerations

To prevent obstruction or damage during roof movement, observe the following:

- For Roof rotation, allow adequate space behind each Skydio Dock.
- The Roof rotates **6.0 in (15.2 cm)** above the base of the Dock; ensure no obstructions exist within this rotation zone.

Mounting and Structural Requirements

This section describes mounting and structural requirements for installing the Skydio Dock for X10. Requirements cover mounting methods, surface leveling, hardware specifications, and grounding to ensure a stable and safe installation.

© 2026 Skydio, Inc. All rights reserved. Proprietary. Printed copies are uncontrolled.

Note:
Dock for X10 may be freestanding or bolted onto a permanent structure. It is the Customer's sole responsibility to provide permanent mounting of the Dock System and External Radio.

Mounting Method

The following mounting methods explain how to secure the Skydio Dock to an installation surface:

Recommended: Secure the Skydio Dock by bolting it to an accessible permanent structure, such as a concrete pad when installing on the ground. The Dock for X10 is approximately **3.1 ft x 2.8 ft (0.9 m x 0.9 m)** and requires a minimum pad size of **4 ft. x 4 ft. x 6 in. (1.2 m x 1.2 m x 15.24 cm)**.

Note:
Refer to the bolting layout diagram for specific bolt placement.

Pad Dimensions

© 2026 Skydio, Inc. All rights reserved. Proprietary. Printed copies are uncontrolled.

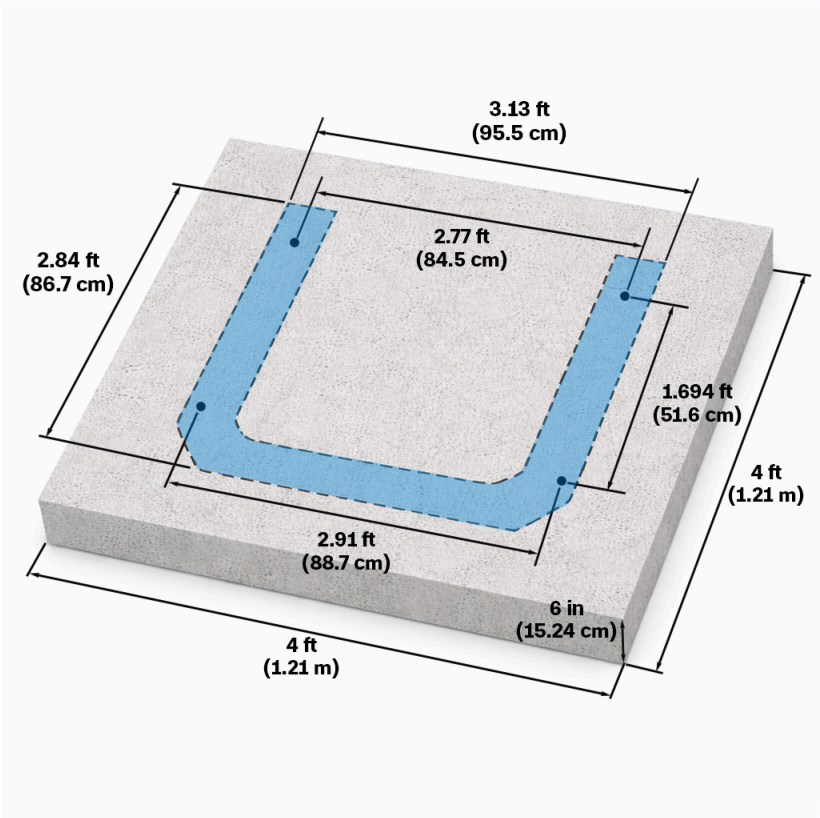

Alternative Options:

- For installations where bolting is not feasible, the Dock may be mounted using four leveling Feet or Boots (non-bolted configuration).
- For proper stability and load distribution, mount the Dock to the standing platform. For a roof constructed with soft or non-structural materials, construct a standing platform with the following minimum dimensions: **40 in x 36 in x 4 in (101.6 cm x 91.4 cm x 10.2 cm)**.
- To accommodate Dock installation and maintenance, ensure a platform height of **12 in (30.48 cm)** or less.

Leveling and Surface Requirements

The following requirements apply to leveling and surface preparation:

- To ensure proper Dock operation and aircraft landing accuracy, the landing surface must be maintained within **±3°** of level.
- Verify level alignment after installation and during periodic maintenance checks.

Dock Boots Guidance

If Dock Boots are required, see the following information:

Category	Specification / Requirement
Material	Steel (painted, holes for paint/hanging only)

© 2026 Skydio, Inc. All rights reserved. Proprietary. Printed copies are uncontrolled.

Category	Specification / Requirement
Weight (per "foot")	~18 lbs (8.2 kg)
Total Added Weight	~72 lbs (32.7 kg) Across All 4x Dock Boots
Surface Grip	Dock Boots use grip tape placed on a rubber Utility Mat adhered with tape
Survival Wind Rating	• Without Dock Boots (Un-anchored Dock): ~40 mph (~64.4 km/h) • With Dock Boots + Utility Mat: ~80 mph (128.7 km/h) • Bolted Dock: > 80 mph (128.7 km/h) Up to 160 mph (257 km/h)

Anchor Bolt and Thread Specifications

WARNING:

Improper structural installation or inadequate anchoring. Structural failure under wind loading may result in equipment damage, falling components, or serious injury. For higher wind exposures (C/D) or other elevated load conditions, use engineered mounts or increase anchoring in accordance with applicable code requirements. Validate installation with a licensed structural engineer.

The following specifications apply to all bolt and thread installations:

Mounting Category	Fastener
Concrete Pad	Steel Wedge Anchor for Concrete 3/8 in -16 x 3 in (M10-1.5 x 75 mm) (McMaster: 91578A823)
Other Structures	High-Strength Grade 8 Steel Hex Head Screws 3/8 in -16 x 2 in (M10-1.5 x 75 mm) (McMaster: 97753A137)

Ensure thread exposure above grade meets the following limits:

- Minimum: **1.0 in (25 mm)**
- Maximum: **2-3/8 in (6.0 mm)**

Use the following diagram for the following:

- Anchor bolt location requirements
- Precise hole spacing
- Bolting pattern

© 2026 Skydio, Inc. All rights reserved. Proprietary. Printed copies are uncontrolled.

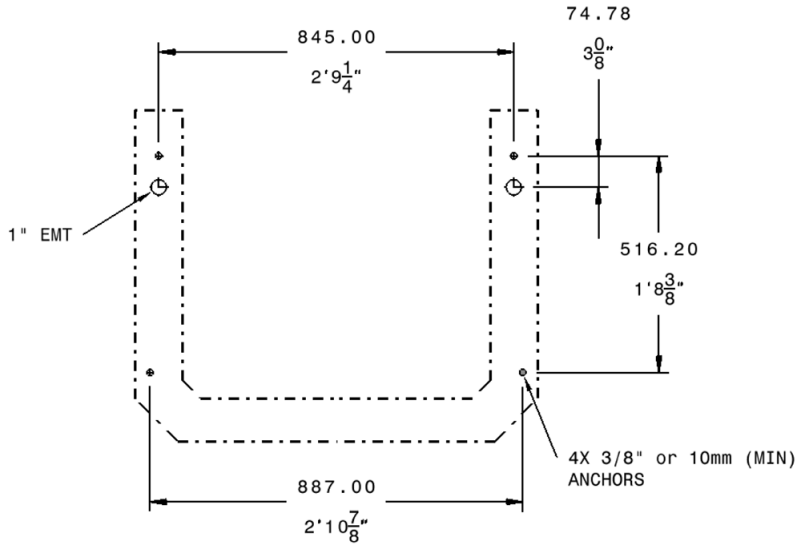

Dock for X10 Grounding

The Dock for X10 is grounded via the electrical system and power supply connections during installation.

© 2026 Skydio, Inc. All rights reserved. Proprietary. Printed copies are uncontrolled.

External Radio Installation Requirements

For the External Radio, note the following:

- Failure to provide dedicated External Radios may cause communication loss between Docks and the network.
- Each Dock requires 1x External Radio to maintain reliable connectivity and full system performance.
- To avoid any signal loss, ensure the maximum distance between the Dock and External Radio is **100 m**.

Distance Between External Radio and Dock / Multiple Radios

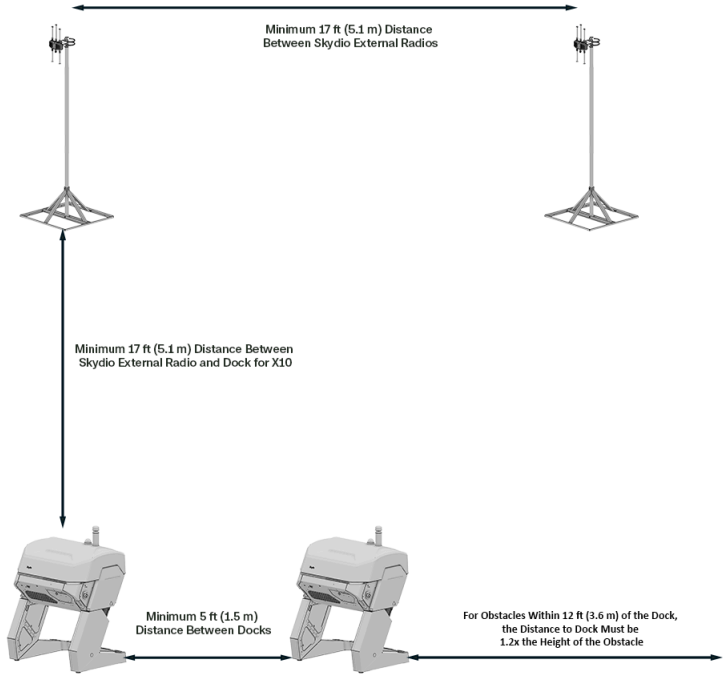

Category	Specification / Requirement
Horizontal distance between External Radio and Dock	Minimum: 17 ft (5.2 m)
Horizontal distance between two or more External Radios	Minimum: 17 ft (5.2 m)
Vertical distance between two External Radios mounted to the same pole (from tip-to-tip of the antennas)	Minimum: 18 in (45.7 cm) Recommended: 36 in (91.4 cm)

© 2026 Skydio, Inc. All rights reserved. Proprietary. Printed copies are uncontrolled.

Category	Specification / Requirement
Mounting height and location	Loss of signal or reduced range will occur if the external radio's line of sight is obstructed. To maintain full communication range, observe the following requirements: • Obstructions will limit the range of Skydio Connect SL in the direction of the blockage. • The External Radio must maintain an unobstructed line of sight (with added margin for wave spread-out) to the horizon in all directions. • To prevent interference with the Drone's line-of-sight, he External Radio must be installed at least **5.0 ft (1.5 m)** above any walls or roof obstructions.

Placement and Line of Sight

Poor placement may reduce signal quality and interrupt Drone-to-Dock communication.

Follow these placement guidelines:

- For optimal line-of-sight, install the External Radio at the highest point of the roof.
- To maintain clear line of sight in all directions, if no elevated location is available, ensure the mounting pole extends at least **10 ft (3.0 m)** above all roof structures.

Final Position Verification

Unverified locations may result in poor RF performance or obstruction interference. All final radio and dock locations must be verified through the Skydio Pre-Site Survey before installation.

© 2026 Skydio, Inc. All rights reserved. Proprietary. Printed copies are uncontrolled.

Mounting Options

WARNING:

Improper structural installation or inadequate anchoring. Structural failure under wind loading may result in equipment damage, falling components, or serious injury. For higher wind exposures (C/D) or other elevated load conditions, use engineered mounts or increase anchoring in accordance with applicable code requirements. Validate installation with a licensed structural engineer.

Improper mounting may result in movement, instability, or loss of communication during operation.

The External Radio may be mounted using one of the following options:

- A Customer-provided structurally mounted pole
- A free-standing non-penetrating ballasted stand provided by Skydio

Note:
To prevent a ballasted stand from shifting or tipping, the Customer must secure it with **~256 lbs (116 kg)** of ballast using 8x **4" x 8" x 16" (100 mm × 200 mm × 400 mm)** cinder blocks, sandbags, or equivalent.

Mount Type	Pole OD	Antenna Set	Ballast (Cinder Blocks)	Target Wind Rating	Assumptions
Banda-clamped to engineered pole	2 to 4 in	Patch or Yagi pair	0	130 mph (209 km/h)	Retention on pole only; pole and anchors engineered to site wind (ASCE 7)
Non-penetrating ballasted stand	2 to 3 in	Patch or Yagi pair	8	50 mph (80 km/h)	Exposure B; standard 4" x 8" x 16" blocks; correct clamp install

Mounting Hardware and Stability

Using undersized or unstable supports may cause mount failure in severe weather.

To ensure long-term structural integrity:

- Use a steel mounting pipe with an outer diameter between **2 in to 6 in (5.1 to 15.2 cm)**.
- Permanently fix the pipe to a structural surface capable of withstanding environmental loads.
- Confirm the assembly remains stable under all expected weather conditions.

Network Cabling

CAUTION:

Improper installation, routing, or excessive length of Cat6 network cables. Improper cabling may result in degraded data transfer rates and reduced communication reliability. Do not exceed recommended cable length limit. Avoid kinking, sharp bends, or placing excess weight on Cat6 network cables.

Meet the following requirements for cabling:

© 2026 Skydio, Inc. All rights reserved. Proprietary. Printed copies are uncontrolled.

- Use a Customer-provided shielded Cat6 or Cat6A Ethernet cable from the base of the External Radio to the Dock accessory port (or to open internet).
- The cable must be outdoor-rated and shielded, and should be encased in conduit where possible.
- Limit total cable length to less than **328 ft (100.0 m)** between the External Radio and Dock.

External Radio Grounding

WARNING:

Electrical hazard. Improper grounding can result in electric shock, fire, equipment damage, serious injury, or death. All grounding work must be performed by a qualified electrician in accordance with local codes.

To ensure electrical safety and system stability, the following grounding recommendations apply:

- **Utility Use Cases**: Grounding is recommended using grounding straps or cables attached to the Dock and External Radio.
- **All Other Use Cases**: Grounding is recommended for improved electrical safety and system stability.

Skydio Authorized Technicians will install a grounding strap between the external radio and the mounting pole.

- If using the provided non-penetrating sled, provisions must be made to ground the sled using a conductive fastener or securing the grounding wire between one of the fasteners in the assembly.
- If using a non-conductive pole, provisions must be made to connect a grounding wire to the lug of the grounding strap fastened to the pole.

© 2026 Skydio, Inc. All rights reserved. Proprietary. Printed copies are uncontrolled.

Multiple Docks (Hive)

WARNING:

Improper installation or operation of multiple Skydio Dock for X10 units. Improper installation or operation may result in significant equipment or property damage, severe injury, or death. Follow all safety, electrical, and operational requirements for the installation and operation of multiple Skydio Dock for X10 units.

Hive Layout and Clearance

A **Hive** is a group of 2 to 6 Docks installed in the same location. When installing a Hive, ensure the following:

- Maintain a minimum of **5.0 ft (1.5 m)** between each Dock, side-by-side.
- Maintain a minimum of **15 ft (4.6 m)** of clearance around each set of Docks for safe operation and flight maneuvering.
- Provide a **4 ft x 4 ft (1.22 m × 1.22 m)** square space nearby as an alternative safe landing zone.
- Final locations to be determined during Skydio Site Survey.

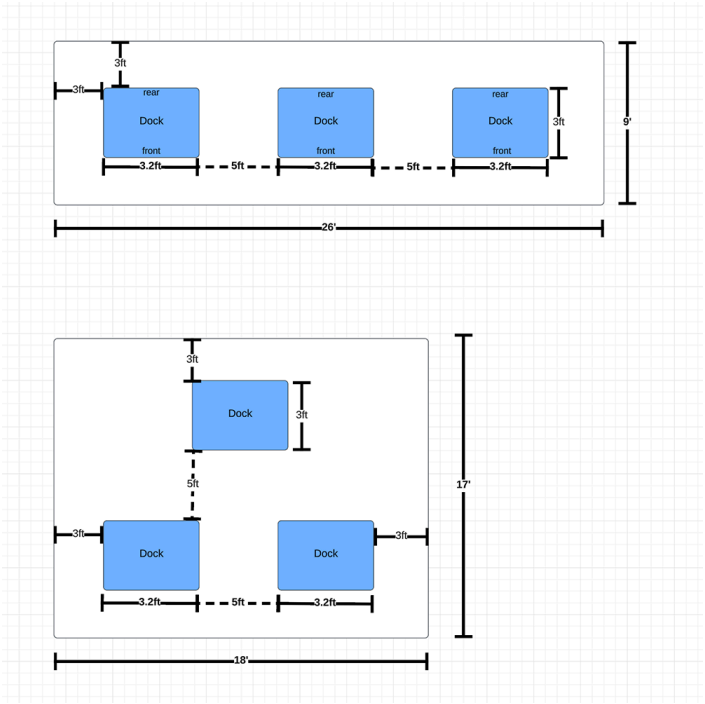

© 2026 Skydio, Inc. All rights reserved. Proprietary. Printed copies are uncontrolled.

Appendixes

Corrosion Guidance

Dock for X10 is designed and tested to operate in coastal regions, outside of direct saltwater splash zones. With the standard Maintenance and Repair package for Dock, Skydio Service Representatives will conduct maintenance and repair visits in order to keep Dock for X10 operational.

Corrosive environments will cause cosmetic degradation and may also result in functional degradation. Functional degradation can be corrected by replacing corroded components, which is covered under the Dock for X10 Maintenance and Repair package, so long as the deployment is not in an area of direct saltwater exposure. Cosmetic degradation is, however, not covered under the Maintenance and Repair package.

To reduce the likelihood of functional and cosmetic degradation due to corrosion, Skydio recommends that the Dock for X10 be installed at least **200 m** from coastline. Deployments inside of **200 m** but outside of saltwater splash zones will not void the warranty.

Installation in direct saltwater splash-zones will void the 1-Year Limited Warranty and may result in repairs that are not covered under the Dock for X10 Maintenance and Repair package.

Safety Information

DANGER:

Improper installation or configuration of the Dock for X10. Improper installation or configuration of the Dock for X10 will result in equipment damage, serious injury, or death. For every Dock for X10 installation location, including connectivity and Radio Frequency (RF) mapping, final placement and installation requirements must be determined through a Skydio Site Survey.

DANGER:

Electrical hazard. Exposure to energized components can result in serious injury or death. Follow local/site specific lockout/tagout procedures for de-energizing the Dock and removing electrical hazards. Ensure the work area is clear of unnecessary personnel. If necessary, restrict access to the area.

Before performing service on the unit, do the following:

- Engage the Dock E-Stop button.
- Turn the Dock OFF.
- Disconnect the Dock from the AC power supply.
- Disconnect all external data and power cables from the Dock.
- Complete required lockout/tagout procedures per site requirements.

WARNING:

Ice accumulation when operating below 32°F (0°C) without a 200V-240V power supply. When operating below 32°F (0°C) without a 200V-240V power supply, Dock Heater functionality will be unavailable. Ice accumulation can result in degraded performance, crashes, or loss of the aircraft. For operation below 32°F (0°C), a 200V-240V power supply from a dedicated 20A breaker must be provided to enable Dock Heater functionality. Provide a 100V-120V power supply from a dedicated 15A breaker for operation in temperatures from 32°F (0°C) to 122°F (50°C).

© 2026 Skydio, Inc. All rights reserved. Proprietary. Printed copies are uncontrolled.

WARNING:

Improper installation or operation of multiple Skydio Dock for X10 units. Improper installation or operation may result in significant equipment or property damage, severe injury, or death. Follow all safety, electrical, and operational requirements for the installation and operation of multiple Skydio Dock for X10 units.

WARNING:

Improper structural installation or inadequate anchoring. Structural failure under wind loading may result in equipment damage, falling components, or serious injury. For higher wind exposures (C/D) or other elevated load conditions, use engineered mounts or increase anchoring in accordance with applicable code requirements. Validate installation with a licensed structural engineer.

WARNING:

Transportation pallet tip hazard. Do not remove the Dock from its shipping pallet until it has reached the designated final installation location. While operating lift equipment, wear appropriate PPE.

CAUTION:

Improper installation, routing, or excessive length of Cat6 network cables. Improper cabling may result in degraded data transfer rates and reduced communication reliability. Do not exceed recommended cable length limit. Avoid kinking, sharp bends, or placing excess weight on Cat6 network cables.

NOTICE:

Customer Responsibilities. Skydio will provide Skydio Dock for X10 and External Radio hardware only.

The Customer is solely responsible for providing all infrastructure required for operation, including but not limited to:

- Power
- Electrical work
- Networking
- Wiring between Docks
- Installing protective conduit to encase cable runs
- Mounting
- Site preparation

Skydio assumes no responsibility or liability for any Customer-performed or Customer-provided infrastructure.

© 2026 Skydio, Inc. All rights reserved. Proprietary. Printed copies are uncontrolled.